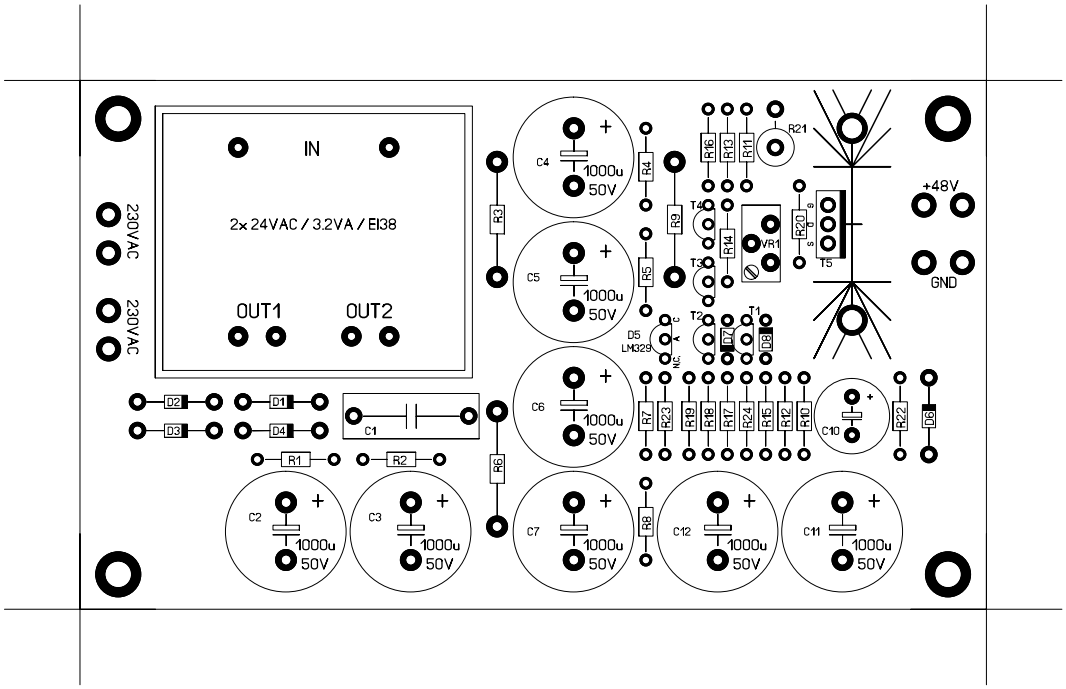
230VAC
230VAC
IN
2x 24VAC / 3.2VA / EI38
OUT1
OUT2
D2
D3
D1
D4
C1
R1
R2
C2
C3
1000u
50V
R3
R6
C4
C5
C6
C7
R4
R5
R8
R9
D5
LM329
NC
T4
T3
T2
T1
R16
R13
R11
R14
R7
R23
R19
R18
R17
R24
R15
R12
R10
D7
D8
VR1
R21
R20
T5
C10
C12
C11
R22
D6
+48V
GND

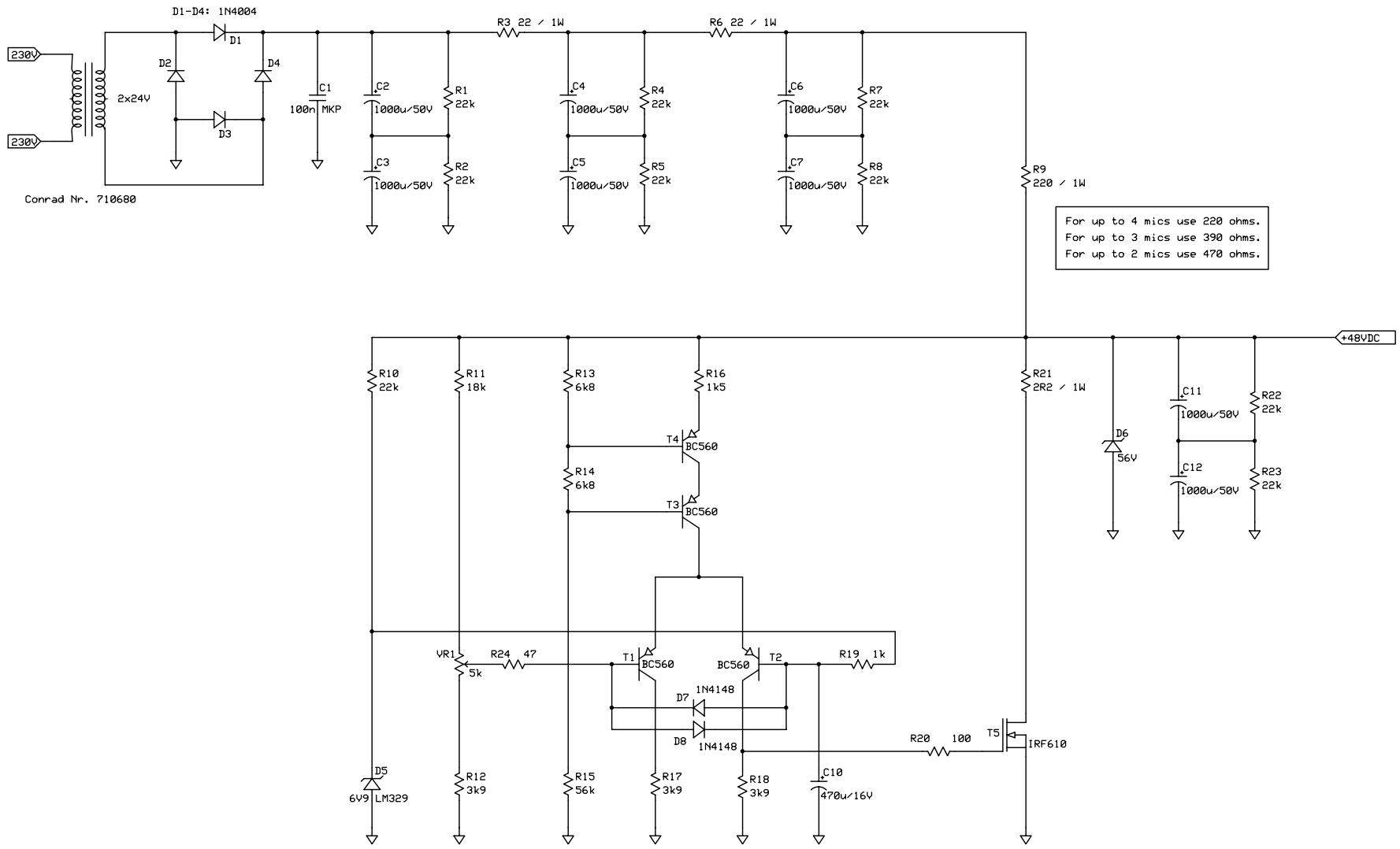

Analoglabor		
48V Phantom Supply		
Designer's name	Rev 1.0a 08.12.2009	Page # or name